No. 806,349. PATENTED DEC. 5, 1905.

C. H. KNIGHT.

SAWMILL SET WORKS.

APPLICATION FILED FEB. 1, 1901.

4 SHEETS—SHEET 3.

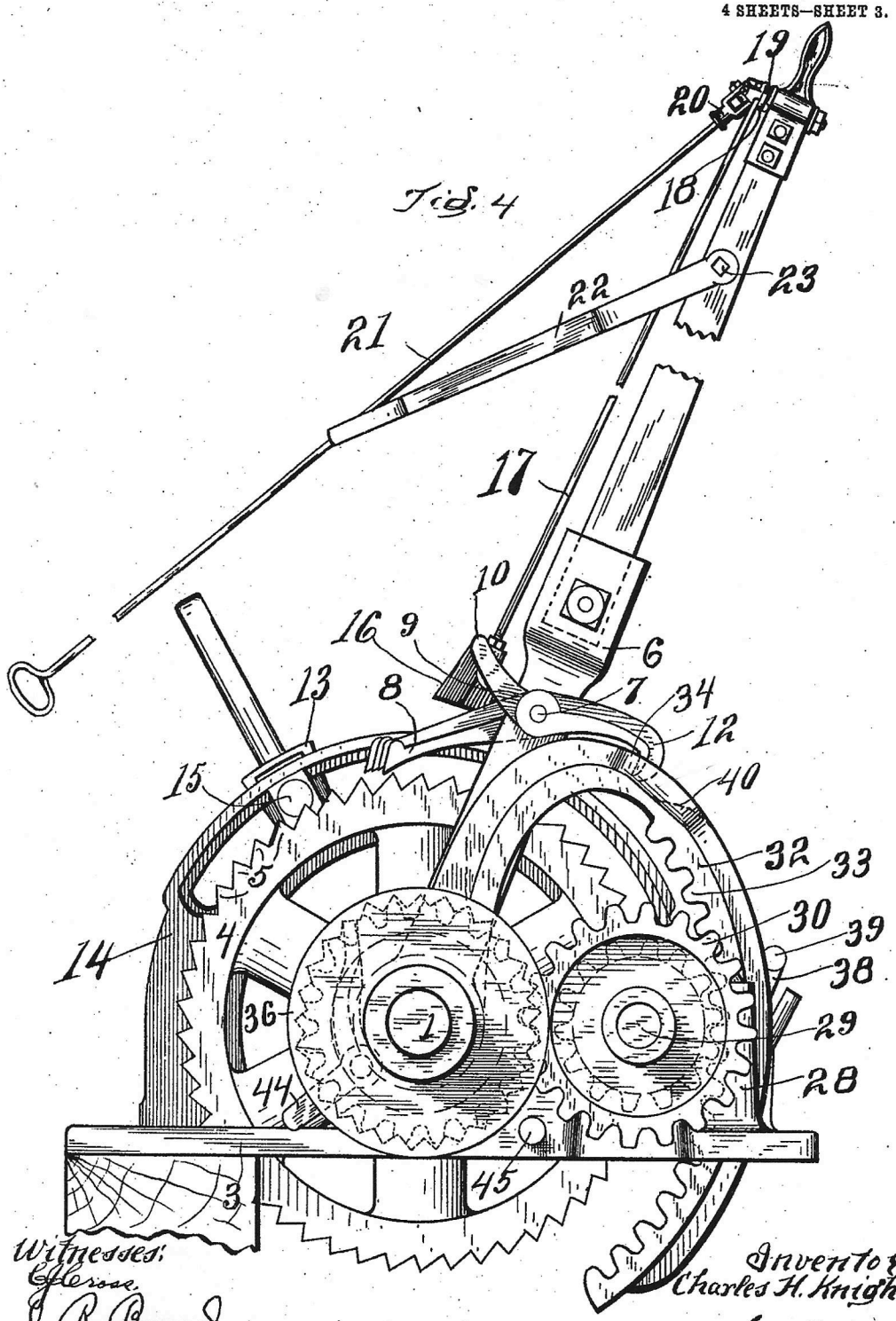

Witnesses:
G. Herse.
J. R. Bond.

Inventor:
Charles H. Knight
By J. W. Bond
Atty.